International Journal of Advanced Multidisciplinary Research and Educational Development
Volume 2 - Issue 6 | November - December 2026 | www.ijamred.com
ISSN: **3107-6513**

A Review of Maximum Power Point Tracking Methods for Solar Photovoltaic Systems and A Proposed Modified Inc–Direct Power Control Framework

Author 1 Name: *Rushikesh Ramdas Kumbhar*
Department: *Electrical Engineering*
College Name: *NMCOE*
Email ID: *rushikesh.kumbhar6112@gmail.com*

Author 2 Name: *Apurva Ramchandra Patil*
Department: *Electrical Engineering*
College Name: *NMCOE*
Email ID: *patilapurva802@gmail.com*

Author 3 Name: *Shivraj Tanaji Patil*
Department: *Electrical Engineering*
College Name: *NMCOE*
Email ID: *shivrajp6032@gmail.com*

Under the Guidance of
Guide Name: *Mrs. Shradha Sushilkumar Patil*
Department: *Electrical Engineering*
College Name: *NMCOE*
Email ID: *scdeshmukh@nmcoe.org.in*

Abstract

The electrical output of a photovoltaic (PV) array is nonlinear, and the operating point that delivers the greatest power changes with irradiance, cell temperature, and shading. Maximum power point tracking (MPPT) is consequently used to adjust the PV operating condition so that the available solar energy can be extracted effectively. This paper presents a comparative review of conventional, adaptive, intelligent, predictive, sensorless, and hybrid MPPT approaches based on the research documents supplied for this study. Perturb and observe (P&O), incremental conductance (INC), modified INC, fuzzy logic, neural-network methods, model predictive control (MPC), and hybrid INC-based strategies are discussed in terms of their principles, reported performance, implementation demands, and validation methods. The reviewed work shows that simple algorithms remain attractive where cost and ease of implementation are important, whereas adaptive and hybrid controllers offer additional options for transient operation and global-peak search, usually with greater design and computational effort. In addition, a research framework combining modified INC with Direct Power Control (DPC) through a DC–DC boost converter is formulated for further investigation. The supplied studies do not demonstrate this exact combined controller; therefore, the proposed arrangement is treated as a research direction and not as a proven result. A consistent MATLAB/Simulink and hardware evaluation procedure is outlined.

Keywords—Photovoltaic system, maximum power point tracking, incremental conductance, direct power control, boost converter, model predictive control, fuzzy logic, hybrid MPPT.

I. INTRODUCTION

Solar photovoltaic generation has become an important option for supplying electricity in distributed, standalone, and grid-connected installations. A PV module converts sunlight into electrical energy, but its terminal characteristics are nonlinear rather than fixed. The power available from the module therefore depends on the surrounding irradiance and temperature as well as on the electrical load connected to it. Since the maximum-power operating point shifts when these conditions change, a controller is required to keep the array close to the point at which its output power is highest [1]–[3].

In a typical arrangement, the PV array is connected to a DC load or DC link through a controlled DC–DC converter. The MPPT algorithm processes measured or estimated electrical quantities, determines the required operating-point adjustment, and modifies the converter duty ratio or switching command. Selection of an MPPT method involves more than tracking accuracy. Response time, steady-state ripple, sensor requirements, computational burden, robustness to parameter changes, partial-shading behaviour, and implementation cost must also be considered [1], [3], [4].

P&O and INC are widely adopted because their operating principles are relatively straightforward and they can be implemented on modest control hardware. However, fixed perturbation steps can cause residual oscillation around the MPP, while abrupt changes in irradiance may complicate the interpretation of measured power changes. To address these issues, researchers have investigated adaptive step sizes, fuzzy and neural controllers, predictive control, population-based search, and hybrid methods that combine local tracking with global-search or supervisory functions [2], [4], [7]–[9].

The purpose of this review is to organize the supplied literature and identify the technical requirements relevant to the project entitled “Modified INC/DPC MPPT Technique for PV Solar System.” The intended arrangement uses a DC–DC boost converter, MATLAB/Simulink modelling, and a hardware prototype. The reviewed documents support several of the individual building blocks, but they do not report a complete modified-INC and DPC MPPT implementation on the specified boost stage. For that reason, established findings and the proposed project concept are discussed separately.

ISSN: 3107-6513

II. PV SYSTEM CHARACTERISTICS AND THE MPP

A. Electrical behaviour of a PV array

A practical PV cell is commonly represented by a photocurrent

source in parallel with a diode. Series and shunt resistances are included to represent internal and leakage-related effects. The terminal current and voltage are influenced by the cell model, incident irradiance, temperature, and the electrical arrangement of the modules. The instantaneous output power is expressed as

PPV = VPV IPV

For a uniformly illuminated array, the power–voltage characteristic generally contains one dominant maximum. At that operating point, the derivative of power with respect to voltage is zero. Since P = VI, differentiation gives dP/dV = I + V(dI/dV) = 0. The corresponding INC condition is dI/dV = −I/V. A positive power–voltage slope indicates operation to the left of the MPP, whereas a negative slope indicates operation to its right [2], [8], [9].

B. Influence of operating conditions

An increase in irradiance generally raises the photocurrent and the power that the array can deliver. Cell temperature has a pronounced influence on voltage and can reduce the voltage associated with maximum power. Partial shading produces unequal current contributions among modules and may create several local maxima on the array power curve. Consequently, an algorithm designed only for a single-peak characteristic may converge to a local maximum rather than the global maximum under shaded conditions [3], [7], [9].

III. CLASSIFICATION OF MPPT APPROACHES

The methods discussed in the supplied sources overlap in several respects. For a structured comparison, they are grouped here as conventional search methods, adaptive or intelligent methods, predictive-control methods, global-search techniques, and hybrid or sensorless approaches. These groups are not exclusive: for example, INC may be used as the local tracking component of a controller that also includes fuzzy supervision or a global optimizer.

A. Conventional tracking algorithms

The P&O method deliberately changes the PV operating voltage or converter duty ratio and then observes the resulting change in power. When the measured power increases, the controller continues in the same direction; when power decreases, it reverses the perturbation. Its simple decision process and low implementation cost explain its continued use. Its main drawback is the oscillation caused by repeated perturbations near the MPP. In addition, an irradiance transition occurring between two samples can be mistaken for a power change caused by the controller itself [1], [2], [9].

INC uses the relationship between instantaneous conductance, I/V, and incremental conductance, ΔI/ΔV. Comparing these quantities indicates whether the operating point lies to the left or right of the MPP. Under ideal conditions, the algorithm can identify the MPP condition without relying solely on the direction of a previous perturbation. Actual performance, however, depends on sensor accuracy, sampling rate, filtering, numerical resolution, and the selected step size. A larger step generally speeds up convergence but increases ripple; a smaller step reduces ripple while lengthening the response [2], [8], [9].

Other relatively simple techniques include constant-voltage, open-circuit-voltage, short-circuit-current, and temperature-based methods. These approaches can reduce controller complexity, but they often depend on empirical relationships or require periodic measurements that may interrupt normal operation. Changes in module characteristics and environmental conditions can also reduce their accuracy [1], [2].

IV. ADAPTIVE, INTELLIGENT, AND HYBRID METHODS

A. Variable-step and modified INC

Variable-step INC modifies the adjustment size according to the estimated distance from the MPP. A comparatively large correction is used when the operating point is far from the maximum, while the correction is reduced as the estimated slope approaches zero. This approach is intended to balance rapid convergence with lower steady-state oscillation. Fawzy and Abd El Sattar describe a modified INC method used with a boost converter in a grid-connected PV system. Their MATLAB/Simulink study reports improved tracking and reduced oscillation compared with conventional INC under the simulated irradiance and temperature conditions [8]. The reported evidence supports further study of modified INC, but it does not establish that the same improvement will occur for every PV rating, converter design, or operating profile.

B. Fuzzy logic and neural-network control

A fuzzy controller converts input variables such as tracking error and change in error into a control action using membership functions and a rule base. This structure can represent nonlinear behaviour without requiring a complete analytical model of the PV array. The design nevertheless depends on suitable membership functions and rules, and the controller may require additional tuning and computation. Artificial neural networks learn a relationship between measured or estimated quantities—such as irradiance, temperature, voltage, and current—and a desired operating reference or duty ratio. Their reliability depends on the quality and coverage of the training data and on validation outside the training conditions [3], [7], [9].

Dhineshkumar et al. study a PV-powered electric-vehicle architecture that combines a radial-basis-function neural-network MPPT method with a SEPIC-integrated isolated flyback converter and a reduced-switch multilevel inverter. For that particular arrangement, the authors report 96% MPPT efficiency, 95.4% converter efficiency, and 2.16% inverter total harmonic distortion [6]. These values describe the reported EV-

ISSN: 3107-6513

oriented system and should not be used as direct performance targets for a conventional PV boost converter.

C. Hybrid INC–Fuzzy–LSTM approach

Orebanjo et al. combine adaptive INC for local MPP tracking with a particle-swarm-optimized fuzzy layer for duty-cycle supervision and an LSTM network for short-term irradiance prediction. Their MATLAB/Simulink investigation considers four dynamic irradiance scenarios. The authors report a mean tracking efficiency of 96.0%, an average tracking time of 1.45 s, mean steady-state oscillation of 4.8 W, and global-peak detection rates between 95.8% and 99.2% for their selected cases [7].

The authors identify the work as simulation-based and recommend further hardware-in-the-loop or experimental assessment. They also indicate that component-ablation studies are needed to isolate the contribution of the individual controller layers. The reported results therefore illustrate a possible hybrid architecture, rather than confirming equivalent performance in a physical PV installation [7].

D. Global maximum-power search

Population-based methods, including particle swarm optimization, are used to search a wider portion of the PV power surface. They are relevant when partial shading creates several local maxima and a local slope-based controller may stop at a suboptimal peak. A global-search stage can improve the chance of identifying the global MPP, but it adds computation, parameter selection, and possible disturbances to the operating point. A practical hybrid arrangement may therefore use a global-search procedure to identify a promising region and then transfer control to a faster local tracker [3], [9].

V. PREDICTIVE AND SENSORLESS MPPT

A. Model predictive control

Ahmed et al. investigate MPPT based on model predictive control. Their discussion distinguishes fixed-switching methods, in which a predicted PV reference is followed by a modulation or control stage, from variable-switching methods that select converter switching states directly. The study considers direct MPPT realizations and discusses simplifications associated with avoiding some forms of converter-model discretization. For the reported DMPPT2 method, the authors present approximately three-times-faster tracking than the fixed-switching method for a step-change test, 97.55% average efficiency in static experimental tests, and 99.67% in dynamic hardware-in-the-loop tests [4]. These figures belong to the particular method and test conditions described in that paper. The authors also identify drift as an issue requiring attention.

MPC and DPC should not be treated as interchangeable terms. MPC predicts system behaviour using a model and selects an action according to a prediction or optimization criterion. DPC refers to a different control family in which selected power quantities are regulated through a direct control structure. The MPC study is therefore relevant to predictive MPPT and direct switching concepts, but it is not experimental proof of the proposed DPC controller [4].

B. Sensorless MPPT

A conventional MPPT controller generally measures PV voltage and current to calculate power. Sensorless arrangements attempt to estimate one of these quantities from converter relationships, potentially reducing sensor count, signal-conditioning circuits, and exposure to measurement noise. Genc et al. present a current-sensorless method for a standalone PV-battery system using an interleaved hybrid boost converter. In their approach, PV input current is estimated from the inductor voltage during the switch ON interval. The work includes simulation and DSP-based experimental validation. The authors report 96% efficiency for the hybrid interleaved boost stage at a nominal 400 W output and an MPPT response in the approximate range of 50–100 ms following an irradiance step [5]. These findings are specific to the converter and standalone battery arrangement studied.

Removing a sensor does not eliminate the need for accurate feedback. Estimation errors can arise from parasitic elements, changes in operating mode, component tolerances, and electrical noise. During prototype validation, the estimated current should therefore be compared with an independent reference measurement, even if the final controller does not use a dedicated current sensor during normal operation [5].

VI. BOOST CONVERTER AND MPPT CONTROL INTERFACE

A DC–DC boost converter is commonly used when the required DC-link voltage is higher than the PV array voltage. Under ideal continuous-conduction operation, its steady-state conversion ratio is

$$Vo / VPV = 1 / (1 - D)$$

where D denotes the switch duty ratio. This expression is an ideal reference. A practical converter also exhibits semiconductor voltage drops, winding resistance, capacitor equivalent series resistance, switching losses, dead-time effects, and possible discontinuous-conduction behaviour. The MPPT controller changes the duty ratio or switching command to move the PV terminal operating point while maintaining acceptable inductor current and DC-link voltage.

In a cascaded arrangement, the modified INC block can calculate a desired MPP reference from measured PV voltage and current. Depending on the selected architecture, the output of this block may be a PV-voltage reference, a current reference, or a power reference. An inner control layer then follows that reference. The selected reference must be consistent with the DPC formulation and with the states that can be measured or estimated in the actual boost-converter circuit.

DPC has been used in different power-electronic applications, but a switching table developed for a grid-side inverter cannot simply be transferred to a unidirectional PV boost converter. The designer must define the controlled power variable, converter states, power error, admissible switching

ISSN: 3107-6513

actions, sampling interval, and protection constraints for the topology under consideration. This derivation is an essential part of the proposed project.

VII. COMPARATIVE REVIEW OF THE SUPPLIED STUDIES

Table I condenses the principal methods and evidence described in the nine supplied research documents. Numerical results are retained with their original application context. They are not normalized because the papers use different PV ratings, converter circuits, irradiance profiles, test environments, and definitions of efficiency. The table is therefore intended as a qualitative comparison rather than a ranking of algorithms.

Study / method	Main evidence or contribution reported
Comparative assessment of ten conventional MPPT algorithms [1]	Examines energy yield and implementation cost; P&O and incremental-conductance variants provide favourable overall trade-offs for the studied uniformly illuminated standalone system.
Review of recent PV MPPT techniques [2]	Summarizes conventional and advanced algorithms, including their benefits, limitations, sensing needs, and implementation complexity.
Systematic review of MPPT and AI trends [3]	Organizes selected 2019–2022 literature and discusses AI, metaheuristic methods, and partial-shading challenges.
MPC-based MPPT [4]	Reports 97.55% static experimental efficiency and 99.67% dynamic HIL efficiency for the specified DMPPT2 method, together with faster step response than the fixed-switching case.
Current-sensorless MPPT with interleaved hybrid boost [5]	DSP-based experimental study; reports 96% boost-stage efficiency at 400 W and an approximately 50–100 ms response to an irradiance step.
RBFNN MPPT for PV-powered EV architecture [6]	Reports 96% MPPT efficiency, 95.4% converter efficiency, and 2.16% inverter THD for the investigated system.
Hybrid INC–Fuzzy–LSTM method [7]	Simulation results include 96.0% mean tracking efficiency, 1.45 s mean tracking time, 4.8 W mean oscillation, and 95.8–99.2% GMPP detection for selected cases.
Modified INC with boost converter [8]	MATLAB/Simulink comparison reports improved MPP tracking and reduced oscillation relative to conventional INC under the simulated conditions.
Review of current and emerging MPPT methods [9]	Discusses classical, adaptive, and hybrid strategies, including the effects of climate variation and partial shading.

TABLE I. SUMMARY OF THE SUPPLIED MPPT STUDIES

VIII. RESEARCH GAPS

The reviewed work points to several unresolved design issues. First, fixed-step P&O and INC involve a compromise between convergence speed and the magnitude of steady-state oscillation. Second, rapid irradiance variation and partial shading can challenge local-search algorithms, particularly when the PV array characteristic contains more than one peak. Third, intelligent and hybrid methods introduce additional requirements relating to processor capability, training data, parameter tuning, and reproducibility. Finally, converter topology and sensing arrangements have a direct influence on measured performance. Results obtained from different systems should not be compared as though they were produced under identical conditions [1]–[9].

For the project considered here, the most significant gap in the supplied material is the absence of a demonstrated modified-INC/DPC MPPT controller for a PV-fed conventional boost converter. The modified-INC study supports investigation of the local-tracking component [8], while the MPC study provides evidence for predictive and direct-switching MPPT concepts [4]. However, MPC is not DPC. A credible contribution must specify the DPC structure, derive its control law for the selected converter, and evaluate the integrated method experimentally.

IX. PROPOSED MODIFIED INC–DPC FRAMEWORK

The following arrangement is proposed from the project description and is not claimed as a result established by the reviewed studies. PV voltage and current are acquired and conditioned, after which instantaneous PV power is calculated. The modified INC stage evaluates the conductance condition and updates the selected MPP reference. This reference is supplied to the DPC stage, which determines the boost-switch command according to a control law developed for the actual converter. A supervisory protection function limits inductor current, PV voltage, and DC-link voltage.

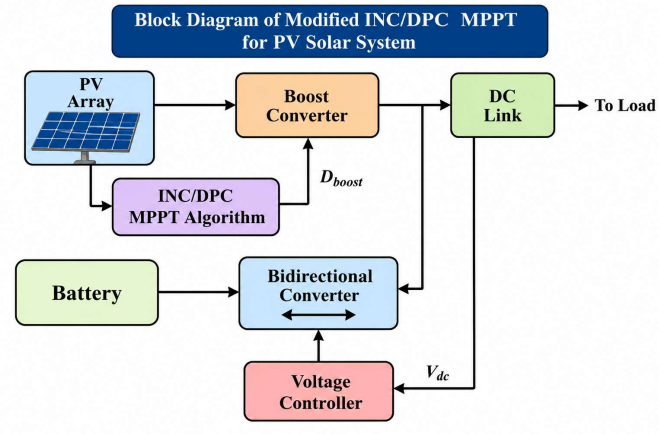

Before the arrangement can be described as a complete INC–DPC algorithm, several design decisions must be documented. The INC output must be identified as a voltage, current, or power reference. The DPC feedback variables and the

ISSN: 3107-6513

definition of power error must be stated. The switching command must be generated using a clearly described switching table, hysteresis-based logic, modulator, or other specified method. Current and voltage limits, sampling frequency, filtering, start-up behaviour, and stability during load and irradiance changes must also be addressed.

At a high level, the controller repeatedly samples PV voltage and current, calculates PV power, evaluates the INC condition, updates a bounded reference, computes the error required by the chosen DPC formulation, selects a permissible switch command, and applies the gate signal. The mathematical DPC law, switching logic, and parameter values must be derived from the final circuit rather than assumed from a different converter topology.

X. VALIDATION PLAN FOR SIMULATION AND HARDWARE

A meaningful evaluation should compare conventional INC, modified INC, and the proposed modified INC–DPC controller using the same PV model, boost-converter parameters, switching frequency, sampling period, measurement filtering, initial conditions, and environmental profiles. A P&O baseline may also be included, provided that its perturbation size and sampling interval are reported. The test set should include steady irradiance, upward and downward irradiance steps, temperature variation, combined irradiance and temperature changes, DC-load disturbances, and partial shading if global-MPP capability is claimed.

The following performance indicators are recommended: (i) MPPT tracking efficiency, with the reference power or energy clearly defined; (ii) convergence time after a specified environmental or load change; (iii) steady-state power ripple or oscillation; (iv) transient overshoot and settling time; (v) energy captured over a stated interval; (vi) converter efficiency; (vii) inductor-current and DC-link-voltage ripple; (viii) switching frequency and switching losses; and (ix) controller execution time. The PV module data, irradiance, cell temperature, converter components, load, sampling period, and duration of each test should accompany the results.

For hardware testing, the prototype should use suitably rated components, calibrated measurement channels, isolated gate driving, and overcurrent and overvoltage protection. A controlled PV source or PV emulator is useful where available. Controller signals should be recorded alongside independent electrical measurements. A result obtained only in MATLAB/Simulink must be identified as simulation evidence and must not be presented as hardware verification. If the physical prototype differs from the simulation in PV rating or converter topology, the differences and scaling approach should be explained.

XI. FURTHER RESEARCH CONSIDERATIONS

Further development should first establish a reproducible DPC formulation for the selected boost converter. Adaptive selection of the INC step size may then be investigated to improve the balance between response speed and residual ripple. Sensor reduction should be considered only when the estimation method can maintain adequate accuracy over the intended operating range. Coordinated operation during rapid irradiance transitions and load disturbances also requires attention. If partial-shading performance is claimed, local tracking must be distinguished from global-peak detection.

Additional prediction or optimization layers should be included only when their expected benefit justifies their computation and training requirements. Hardware-in-the-loop tests, processor-load measurements, repeated experiments, and longer-duration outdoor evaluation would provide stronger evidence than idealized simulation alone [4], [5], [7].

XII. CONCLUSION

This paper has reviewed conventional, modified, intelligent, predictive, sensorless, and hybrid MPPT strategies using the research documents supplied for the project. P&O and INC continue to offer practical solutions where simplicity and cost are important. Modified INC seeks to improve the compromise between convergence and steady-state behaviour, while fuzzy logic, neural networks, MPC, and hybrid methods provide further options at the cost of additional design or computational effort. The numerical values reported in the literature apply to their respective converter structures and test conditions; they should not be treated as directly comparable performance rankings.

A modified INC–DPC controller using a DC–DC boost converter is a suitable direction for further investigation. The reviewed sources provide support for modified INC, predictive or direct-switching MPPT concepts, and experimental PV-converter development as separate topics. They do not establish the performance of the proposed combination. The project should therefore contribute a clearly derived control architecture, a fair comparison with conventional INC, and original simulation and hardware evidence before any performance advantage is claimed.

REFERENCES

[1] R. Faranda and S. Leva, “Energy comparison of MPPT techniques for PV systems,” WSEAS Transactions on Power Systems, vol. 3, no. 6, pp. 446–454, Jun. 2008.

[2] R. Kumar and P. K. Rathore, “Recent MPPT techniques for photovoltaic systems—A review,” International Journal of Trend in Research and Development, vol. 9, no. 5, pp. 12–17, Sep.–Oct. 2022.

[3] O. Boubaker, “MPPT techniques for PV systems: A systematic review in current trends and recent advances in AI,” Research Square, posted Oct. 16, 2023, doi: 10.21203/rs.3.rs-2998892/v3.

[4] M. Ahmed, I. Harbi, R. Kennel, J. Rodríguez, and M. Abdelrahem, “Maximum power point tracking-based model predictive control for photovoltaic systems: Investigation and new perspective,” Sensors, vol. 22, no. 8, Art. no. 3069, 2022, doi: 10.3390/s22083069.

[5] N. Genc, H. Uzmus, Z. Kalimbetova, M. A. Celik, and S. Ramankulov, “Current sensorless MPPT method with battery management for PV based single phase standalone system,” Scientific Reports, vol. 16, Art. no. 9107, 2026, doi: 10.1038/s41598-026-40097-2.

ISSN: **3107-6513**

[6] K. Dhineshkumar, N. Vengadachalam, S. Muthusamy, and B. Khan, "Integrated MPPT and bidirectional DC DC converter with reduced switch multilevel inverters for electric vehicles applications," Scientific Reports, vol. 15, Art. no. 25053, 2025, doi: 10.1038/s41598-025-08700-0.

[7] O. Orebanjo, I. A. Onyegbadue, S. N. Ukagu, L. O. Odejimi, O. N. Amasowomwan, and D. O. Okonkwo, "Hybrid INC–Fuzzy–LSTM MPPT for photovoltaic arrays under dynamic cloud conditions," International Journal of Global Trends and Research, vol. 3, no. 3, pp. 278–295, 2026, doi: 10.54117/sqg68p56.

[8] I. Y. Fawzy and M. Abd El Sattar, "A modified incremental conductance technique for maximum power point tracking of a grid-connected photovoltaic system," Journal of Advanced Engineering and Management Research, vol. 1, no. 1, Article 010102, 2026.

[9] L. Guanghua, A. M. Soomar, S. H. H. Shah, S. Shaikh, and P. Musznicki, "Maximum power point tracking strategies for solar PV systems: A review of current methods and future innovations," Results in Engineering, vol. 28, Art. no. 107227, 2025, doi: 10.1016/j.rineng.2025.107227.